WDFN8 5x6, 1.27P
CASE 506DP
ISSUE O

DATE 31 AUG 2016

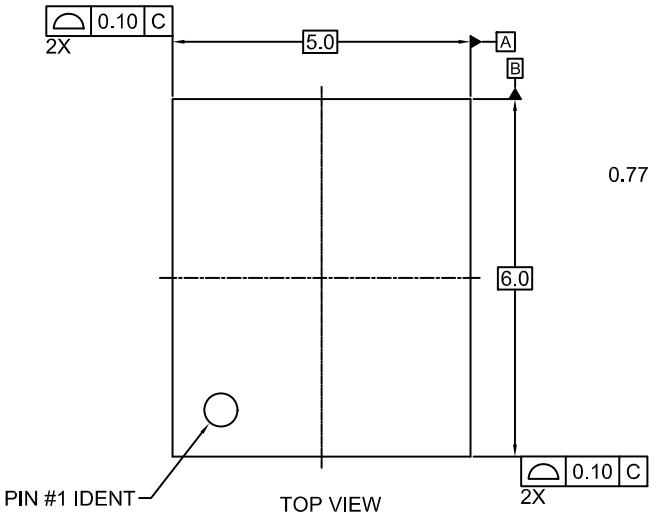

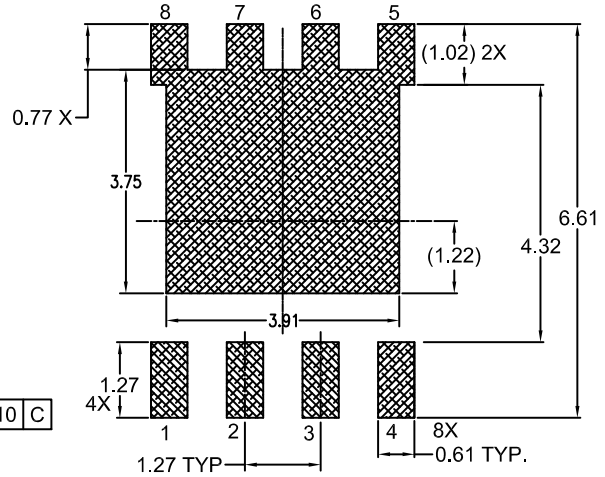

RECOMMENDED LAND PATTERN

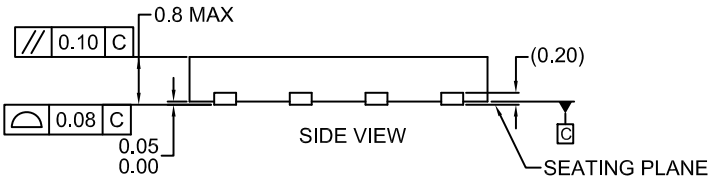

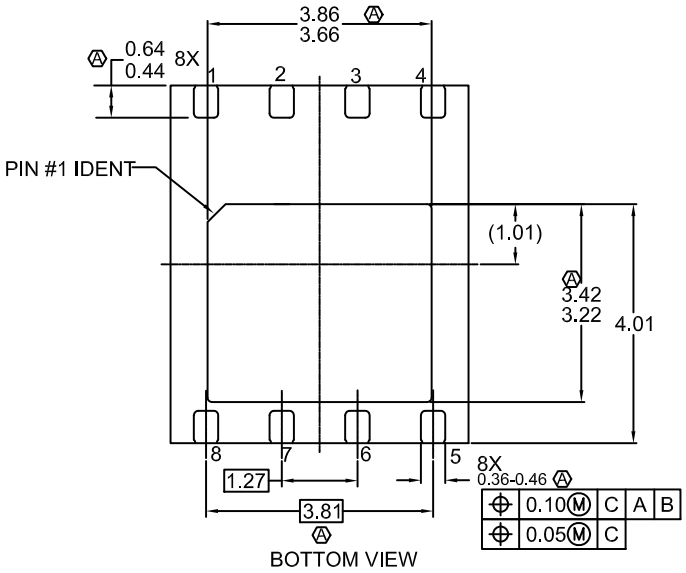

NOTES:

A. DOES NOT FULLY CONFORM TO JEDEC REGISTRATION, MO-229.
B. DIMENSIONS ARE IN MILLIMETERS.
C. DIMENSIONS AND TOLERANCES PER ASME Y14.5M, 1994
D. TERMINALS 5,6,7 AND 8 ARE TIED TO THE EXPOSED PADDLE

DOCUMENT NUMBER:	**98AON13598G**	Electronic versions are uncontrolled except when accessed directly from the Document Repository. Printed versions are uncontrolled except when stamped "CONTROLLED COPY" in red.
DESCRIPTION:	**WDFN8 5X6, 1.27P**	**PAGE 1 OF 1**

ON Semiconductor and ON are trademarks of Semiconductor Components Industries, LLC dba ON Semiconductor or its subsidiaries in the United States and/or other countries. ON Semiconductor reserves the right to make changes without further notice to any products herein. ON Semiconductor makes no warranty, representation or guarantee regarding the suitability of its products for any particular purpose, nor does ON Semiconductor assume any liability arising out of the application or use of any product or circuit, and specifically disclaims any and all liability, including without limitation special, consequential or incidental damages. ON Semiconductor does not convey any license under its patent rights nor the rights of others.

© Semiconductor Components Industries, LLC, 2019